Our pump system for sampling air within each autochamber has two configurations depending on the length of slackline employed. For a 50' slackline, we found that a single pump capable of 3+ Lpm free air was sufficient for moving air to and from the chamber. However, increasing the slackline to 100' created sufficient resistance in the 3/8" Bev-a-line tubing to require a stronger pump. In the latter case, we used the smaller pump to sample from the larger airstream to avoid pushing too much volume through the Li-820. By pulling air through the Li-820, and returning it back to the larger airstream, we are able to avoid backpressure from the larger pump to the Li-820.

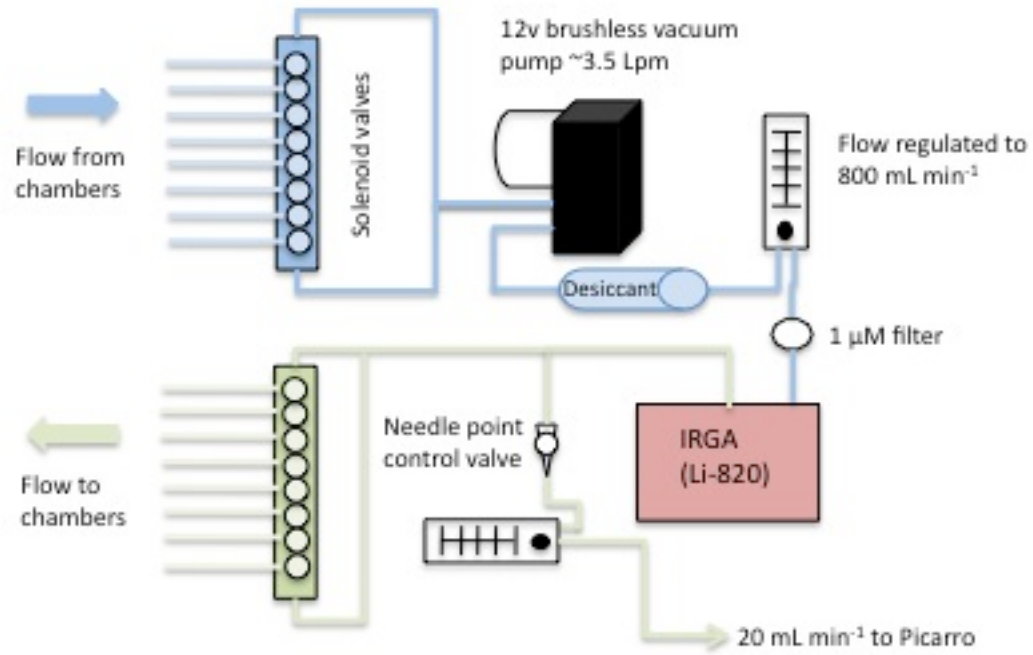

Single pump configuration for 50' slackline run.

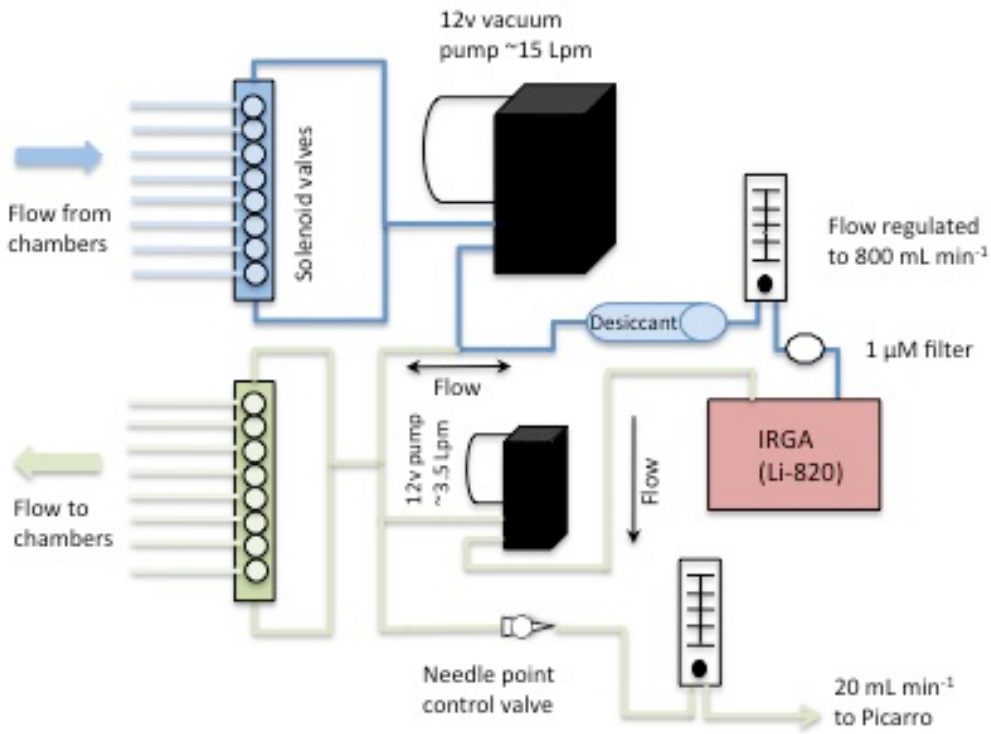

Dual pump configuration for 100' slackline run. Smaller pump samples from airstream generated by larger pump.